INSTYTUT TECHNIKI BUDOWLANEJ
PL 00-611 WARSZAWA
ul. Filtrowa 1
tel.: (+48 22) 825-04-71
(+48 22) 579-62-94
eta@itb.pl
www.itb.pl

Designated according to Article 29 of Regulation (EU) No 305/2011 and member of EOTA (European Organisation for Technical Assessment)

Member of EOTA
www.eota.eu

European Technical Assessment

ETA-21/1017 of 30/12/2021

General Part

Technical Assessment Body issuing the European Technical Assessment	Instytut Techniki Budowlanej
Trade name of the construction product	HILTI channel connectors of MT System
Product family to which the construction product belongs	Products for installation systems for supporting technical building equipment
Manufacturer	HILTI AG Feldkircherstraβe 100 9494 Schaan FÜRSTENTUM LIECHTENSTEIN
Manufacturing plants	L 1128868, L 1006522, L 1066663
This European Technical Assessment contains	14 pages including 3 Annexes which form an integral part of this Assessment
This European Technical Assessment is issued in accordance with regulation (EU) No 305/2011, on the basis of	European Assessment Document EAD 280016-00-0602 "Products for installation systems for supporting technical building equipment"

Specific Part

1 Technical description of the product

This European Technical Assessment covers HILTI channel connectors of MT System: MT-TL M8, MT-TL M8 OC, MT-TL M10, MT-TL M10 OC, MT-TL M12, MT-TL M12 OC, MT-TL M16, MT-TL M16 OC and MT-TFB OC.

MT-TL M8, MT-TL M8 OC, MT-TL M10, MT-TL M10 OC, MT-TL M12, MT-TL M12 OC, MT-TL M16 and MT-TL M16 OC channel connectors consist of a steel bolt, nut made of steel and plate (winged section) made of polyamid. The nut has a centered round opening for bolt. Bolts of MT-TL M8, MT-TL M8 OC, MT-TL M10, MT-TL M10 OC, MT-TL M12, MT-TL M12 OC, MT-TL M16 and MT-TL M16 OC channel connectors are given in Table 3. MT-TFB OC is a thread forming bolt with integrated plate made of steel with torx screw drive.

The drawings, dimensions and materials of the HILTI channel connectors of MT System are given in Annex A.

2 Specification of the intended use in accordance with the applicable European Assessment Document (EAD)

The performances given in clause 3 are only valid if HILTI channel connectors of MT System are in compliance with the specifications and conditions given in Annex B.

The provisions made in this European Technical Assessment are based on an assumed working life of the HILTI channel connectors of MT System of 50 years. The indications given on the working life cannot be interpreted as a guarantee given by the producer or Technical Assessment Body, but are to be regarded only as a means for choosing the right products in relation to the expected economically reasonable working life of the works.

In accordance with the European Assessment Document EAD 280016-00-0602, the products are intended to be used under dry indoor conditions for supporting:

- pipes for the transport of water not intended for human consumption,
- pipes for the transport of gas/fuel intended for the supply of building heating/cooling systems,
- technical building equipment in general.

3 Performance of the product and references to the methods used for its assessment

3.1 Performance of the product

3.1.1 Safety in case of fire (BWR 2)

Essential characteristic	Performance
Reaction to fire	Class A1
Pull-out resistance under fire exposure	No performance assessed
Shear resistance under fire exposure	No performance assessed

3.1.2 Safety and accessibility in use (BWR 4)

Essential characteristic	Performance
Shape	Annex A
Dimensions	Annex A
Material	Annex A
Characteristic pull-out resistance	Annex C
Characteristic shear resistance	Annex C

3.2 Methods used for the assessment

The assessment has been made in accordance with EAD 280016-00-0602.

4 Assessment and verification of constancy of performance (AVCP) system applied, with reference to its legal base

For products for installation systems to be used for supporting pipes for the transport of water not intended for human consumption, according to the Decision 1999/472/EC of the European Commission, amended by the Decision 2001/596/EC, the system 4 of assessment and verification of constancy of performance (see Annex V to the regulation (EU) No 305/2011) applies.

For products for installation systems intended to be used for supporting pipes for the transport of gas/fuel intended for the supply of building heating/cooling systems, according to the Decision 1999/472/EC of the European Commission, amended by the Decision 2001/596/EC, the system 3 of assessment and verification of constancy of performance (see Annex V to the regulation (EU) No 305/2011) applies.

For products for installation systems intended to be used for supporting technical building equipment in general according to the Decision 97/161/EC of the European Commission, the system 2+ of assessment and verification of constancy of performance (see Annex V to the regulation (EU) No 305/2011) applies.

5 Technical details necessary for the implementation of the AVCP system, as provided in the applicable European Assessment Document (EAD)

Technical details necessary for the implementation of the AVCP system are laid down in the control plan deposited in Instytut Techniki Budowlanej.

For the type testing the results of the tests performed as part of the assessment for the European Technical Assessment shall be used unless there are changes in the production line or plant. In such cases the necessary type testing has to be agreed between Instytut Techniki Budowlanej and the notified body.

Issued in Warsaw on 30/12/2021 by Instytut Techniki Budowlanej

Anna Panek, MSc
Deputy Director of ITB

Table A1: Shape of HILTI channel connectors MT-TL M8, MT-TL M8 OC, MT-TL M10, MT-TL M10 OC, MT-TL M12, MT-TL M12 OC, MT-TL M16, MT-TL M16 OC and MT-TFB OC

Shape	Item number	Designation
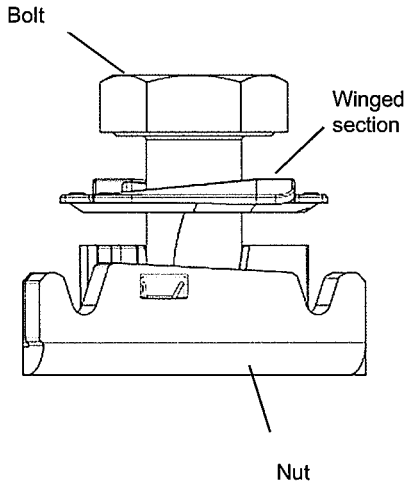	2273630 2272080 2273632 2273634	MT-TL M8 MT-TL M10 MT-TL M12 MT-TL M16
	2273631 2272082 2273633 2273635	MT-TL M8 OC MT-TL M10 OC MT-TL M12 OC MT-TL M16 OC
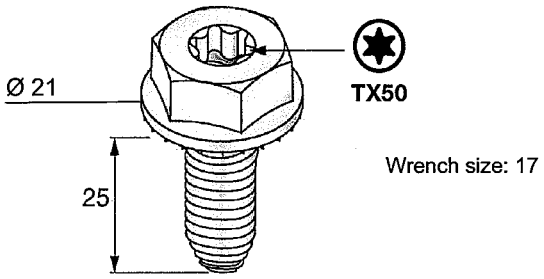	2272084	MT-TFB OC

HILTI channel connectors of MT System	**Annex A1** of European Technical Assessment ETA-21/1017
Product description Shape of channel connectors	

Table A2.1: Materials of the components of HILTI channel connectors MT-TL M8, MT-TL M10, MT-TL M12, MT-TL M16, MT-TL M8 OC, MT-TL M10 OC, MT-TL M12 OC, MT-TL M16 OC and material of HILTI channel connector MT-TFB OC

Shape	Item number	Designation	Material
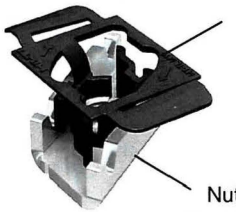	2273630 2272080 2273632 2273634	MT-TL M8 MT-TL M10 MT-TL M12 MT-TL M16	Nut: Steel S460MC acc. to EN 10149-2; zinc coated Winged section: Polyamid
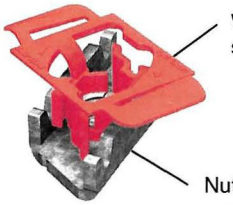	2273631 2272082 2273633 2273635	MT-TL M8 OC MT-TL M10 OC MT-TL M12 OC MT-TL M16 OC	Nut: Steel S460MC acc. to EN 10149-2; zinc coated with organic topcoat Winged section: Polyamid
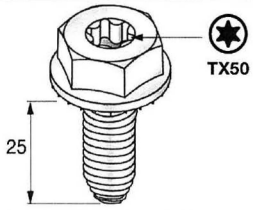	2272084	MT-TFB OC	Steel C10B21 acc. to SAE J403, zinc coated with anti-corrosion topcoat

Table A2.2: Shape and dimensions of components of HILTI channel connectors MT-TL M8, MT-TL M8 OC, MT-TL M10, MT-TL M10 OC, MT-TL M12, MT-TL M12 OC, MT-TL M16 and MT-TL M16 OC

Shape and dimensions of nut [mm]	Shape and dimensions of winged section [mm]
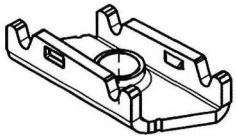	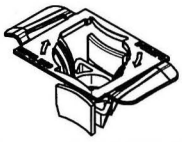
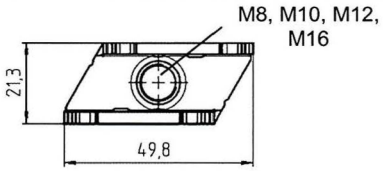	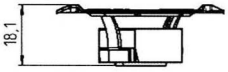
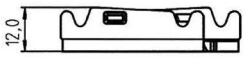	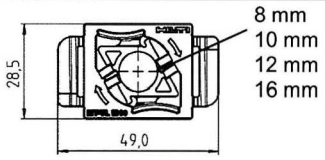

HILTI channel connectors of MT System	**Annex A2** of European Technical Assessment ETA-21/1017
Product description Shape, dimensions and materials of channel connectors	

Table A3: Shape and dimensions of bolts of HILTI channel connectors MT-TL M8, MT-TL M10, MT-TL M12, MT-TL M16, MT-TL M8 OC, MT-TL M10 OC, MT-TL M12 OC and MT-TL M16 OC

Shape and dimensions [mm]	Item number	Designation	Material	HILTI channel connector
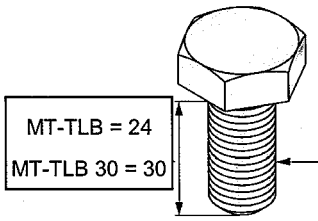	2273254 2282190	MT-TLB MT-TLB 30	Steel strength class 8.8 acc. to EN ISO 898-1, zinc coated	MT-TL M10
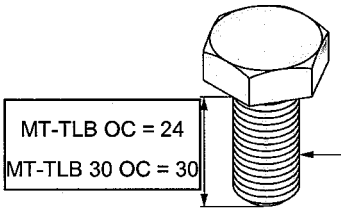	2273256 2282191	MT-TLB OC MT-TLB 30 OC	Steel strength class 8.8 acc. to EN ISO 898-1, zinc coated with organic topcoat	MT-TL M10 OC
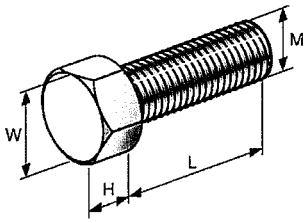 Item Number 2184492: W= 17 mm H = 5 mm L = 25 mm M8 Item Number 2184305: W= 17 mm H = 5 mm L = 30 mm M8	2184492 2184305	Hexagon screw M8x25 DIN 933 8.8 Hexagon screw M8x30 DIN 933 8.8	Steel strength class 8.8 acc. to EN ISO 898-1, zinc coated	MT-TL M8, MT-TL M8 OC
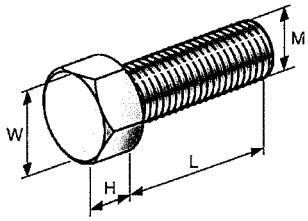 Item Number 2184553: W= 17 mm H = 5 mm L = 25 mm M12 Item Number 2184499: W= 17 mm H = 5 mm L = 35 mm M12	2184553 2184499	Hexagon screw M12x25 DIN 933 8.8 Hexagon screw M12x35 DIN 933 8.8	Steel strength class 8.8 acc. to EN ISO 898-1, zinc coated	MT-TL M12, MT-TL M12 OC
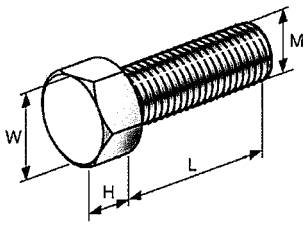 Item Number 2184501: W= 17 mm H = 5 mm L = 30 mm M16 Item Number 2184485: W= 17 mm H = 5 mm L = 35 mm M16	2184501 2184485	Hexagon screw M16x30 DIN 933 8.8 Hexagon screw M16x35 DIN 933 8.8	Steel strength class 8.8 acc. to EN ISO 898-1, zinc coated	MT-TL M16, MT-TL M16 OC

HILTI channel connectors of MT System	**Annex A3** of European Technical Assessment ETA-21/1017
Product description Shape, dimensions and materials of channel connectors	

Specification of intended use

- The HILTI channel connectors MT-TL M8, MT-TL M8 OC, MT-TL M10, MT-TL M10 OC, MT-TL M12, MT-TL M12 OC, MT-TL M16, MT-TL M16 OC and MT-TFB OC are used to transfer the loads of building services components such as ducts and equipment for water, heating, cooling, ventilation, electrical and other installations at ambient temperature.
- The HILTI channel connectors are suitable for undertaking this load-bearing function under the conditions described in Section 2 of this European Technical Assessment.
- The resistance of HILTI channel connectors set down in Annexes C1 ÷ C3 applies for static actions in the direction of the main axes Y, Z (Figure C3.1 and Figure C3.2) in connection with HILTI installation channels of MT System acc. to ETA-21/0414, HILTI base connectors of MT System acc. to ETA-21/1045 and HILTI angle connectors of MT System acc. to ETA-21/1046 and Table B2.
- The nuts of MT-TL M8, MT-TL M8 OC, MT-TL M10, MT-TL M10 OC, MT-TL M12, MT-TL M12 OC, MT-TL M16 and MT-TL M16 OC are connected to the installation channel and the connection components by tightening an appropriate bolt acc. to Table B2.
- MT-TFB OC is used to screw together installation channels and attached angle connectors or base connectors by screwing them together through the appropriate openings of these components.
- The torque and geometry of channel connectors are shown in Table B2.

Table B2: Bolts, torque and geometry of HILTI channel connectors

HILTI channel connectors	Bolts	Torque	Dimensions
MT-TL M8, MT-TL M8 OC	Hexagon bolt M8; Steel strength class 8.8 acc. to EN ISO 898-1	30 Nm	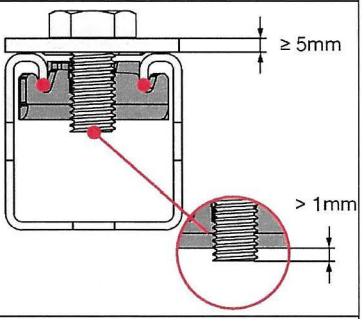
MT-TL M10	MT-TLB	30 Nm	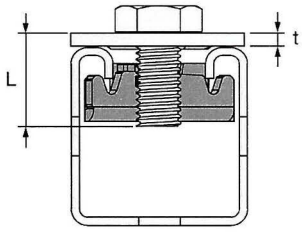
MT-TL M10 OC	MT-TLB OC	40 Nm	t / MT-TLB / L 3 – 6 mm / MT-TLB / 24 mm 6 – 8 mm / MT-TLB 30 / 30 mm
MT-TL M12, MT-TL M12 OC	Hexagon bolt M12; Steel strength class 8.8 acc. to EN ISO 898-1	60 Nm	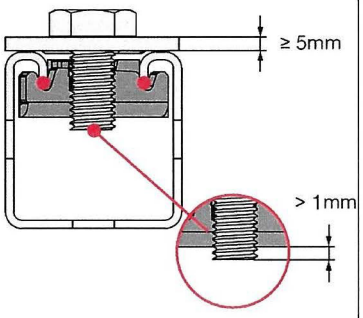
MT-TL M16, MT-TL M16 OC	Hexagon bolt M16; Steel strength class 8.8 acc. to EN ISO 898-1	90 Nm	
MT-TFB OC	Steel C10B21 acc. to SAE J403	60 Nm	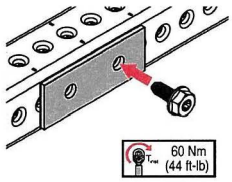

HILTI channel connectors of MT System	**Annex B2** of European Technical Assessment ETA-21/1017
Intended use Bolts, torque and geometry of HILTI channel connectors of MT System	

- The required torque may be applied with electrical or non-electrical devices.
- HILTI installation channels according to ETA-21/0414 used in combination with HILTI channel connectors are cut to length centrally between the longholes or the roundholes at the installation channel marking.
- Prior to installation, it must be ensured, the installation channel, the connection components, the fastening of the connectors to the base material and the base material itself, due to the load of the components to be supported, are suitable to withstand the resistance values of the channel connectors.
- The channel connectors must be installed by appropriately qualified personnel and under the supervision of the site manager. The general installation instructions of the manufacturer apply.

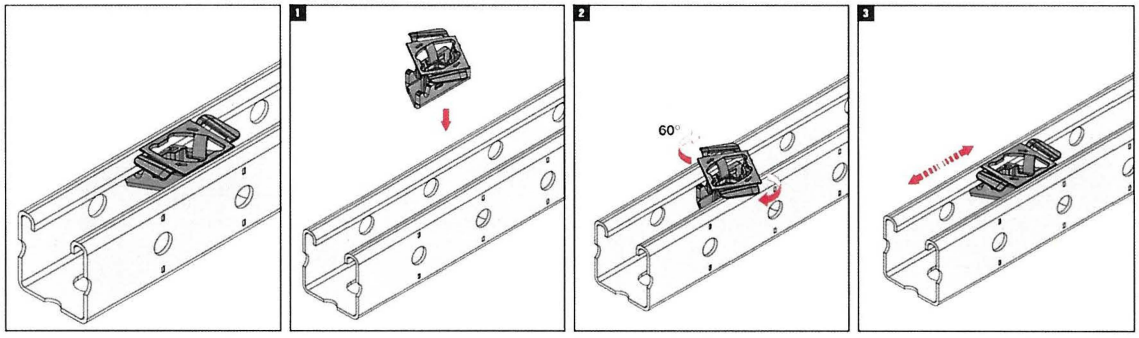

Figure B3.1: Installation instruction for HILTI channel connectors MT-TL M8, MT-TL M10, MT-TL M12, MT-TL M16, MT-TL M8 OC, MT-TL M10 OC, MT-TL M12 OC and MT-TL M16 OC

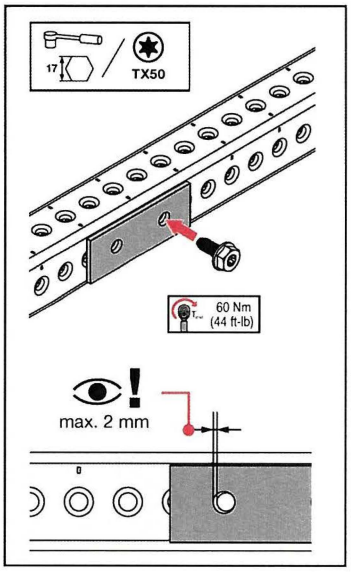

Figure B3.2: Installation instruction for HILTI channel connector MT-TFB OC

HILTI channel connectors of MT System	**Annex B3** of European Technical Assessment ETA-21/1017
Intended use Installation instruction (1)	

- For closed installation channels the distance between the end of the profile and start of the round hole has to be minimum 10 mm.

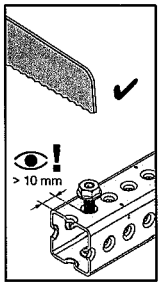

- For open installation channels the distance between the end of the profile and center of the first round hole has to be minimum 25 mm.

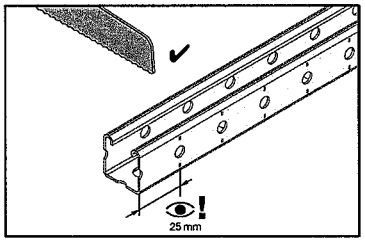

HILTI channel connectors of MT System	**Annex B4**
Intended use Installation instruction (2)	of European Technical Assessment ETA-21/1017

Table C1.1: Characteristic shear resistance and pull-out resistance of the channel connectors MT-TL M8 and MT-TL M8 OC at ambient temperature

HILTI channel connector	HILTI installation channel acc. to ETA-21/0414	Characteristic shear resistance	Characteristic pull-out resistance
		$F_{z,Rk}$ [kN]	$F_{y,Rk}$ [kN]
MT-TL M8 MT-TL M8 OC	MT-30 S MT-30 MT-30 S OC MT-30 OC	7.53	15.67
	MT-40 S MT-40 MT-40 S OC MT-40 OC	7.53	15.67
	MT-50 S MT-50 MT-50 S OC MT-50 OC	7.53	15.67
	MT-60 S MT-60 MT-60 S OC MT-60 OC	7.53	15.67
	MT-40D S MT-40D MT-40D S OC MT-40D OC	7.53	15.67
Partial safety coefficient concerning pull-out resistance $\gamma_M = 1.25$; partial safety coefficient concerning shear resistance $\gamma_M = 1.25$, provided that no other national regulations apply			

Table C1.2: Characteristic shear resistance and pull-out resistance of the channel connectors MT-TL M10 and MT-TL M10 OC at ambient temperature

HILTI channel connector	HILTI installation channel acc. to ETA-21/0414	Characteristic shear resistance	Characteristic pull-out resistance
		$F_{z,Rk}$ [kN]	$F_{y,Rk}$ [kN]
MT-TL M10 MT-TL M10 OC	MT-30 S MT-30 MT-30 S OC MT-30 OC	10.59	14.21
	MT-40 S MT-40 MT-40 S OC MT-40 OC	10.59	14.21
	MT-50 S MT-50 MT-50 S OC MT-50 OC	10.59	14.21
	MT-60 S MT-60 MT-60 S OC MT-60 OC	10.59	14.21
	MT-40D S MT-40D MT-40D S OC MT-40D OC	10.59	14.21
Partial safety coefficient concerning pull-out resistance $\gamma_M = 1.25$; partial safety coefficient concerning shear resistance $\gamma_M = 1.25$, provided that no other national regulations apply			

Table C2.1: Characteristic shear resistance and pull-out resistance of the channel connectors MT-TL M12 and MT-TL M12 OC at ambient temperature

HILTI channel connector	HILTI installation channel acc. to ETA-21/0414	Characteristic shear resistance	Characteristic pull-out resistance
		$F_{z,Rk}$ [kN]	$F_{y,Rk}$ [kN]
MT-TL M12, MT-TL M12 OC	MT-30 S MT-30 MT-30 S OC MT-30 OC	9.75	13.81
	MT-40 S MT-40 MT-40 S OC MT-40 OC	9.75	13.81
	MT-50 S MT-50 MT-50 S OC MT-50 OC	9.75	13.81
	MT-60 S MT-60 MT-60 S OC MT-60 OC	9.75	13.81
	MT-40D S MT-40D MT-40D S OC MT-40D OC	9.75	13.81
Partial safety coefficient concerning pull-out resistance $\gamma_M = 1.25$; partial safety coefficient concerning shear resistance $\gamma_M = 1.49$, provided that no other national regulations apply			

Table C2.2: Characteristic shear resistance and pull-out resistance of the channel connectors MT-TL M16 and MT-TL M16 OC at ambient temperature

HILTI channel connector	HILTI installation channel acc. to ETA-21/0414	Characteristic shear resistance	Characteristic pull-out resistance
		$F_{z,Rk}$ [kN]	$F_{y,Rk}$ [kN]
MT-TL M16 MT-TL M16 OC	MT-30 S MT-30 MT-30 S OC MT-30 OC	10.37	14.20
	MT-40 S MT-40 MT-40 S OC MT-40 OC	10.37	14.20
	MT-50 S MT-50 MT-50 S OC MT-50 OC	10.37	14.20
	MT-60 S MT-60 MT-60 S OC MT-60 OC	10.37	14.20
	MT-40D S MT-40D MT-40D S OC MT-40D OC	10.37	14.20
Partial safety coefficient concerning pull-out resistance $\gamma_M = 1.25$; partial safety coefficient concerning shear resistance $\gamma_M = 1.45$, provided that no other national regulations apply			

Table C3.1: Characteristic shear resistance and pull-out resistance of the channel connector MT-TFB OC at ambient temperature

HILTI channel connector	HILTI installation channel acc. to ETA-21/0414	Characteristic shear resistance	Characteristic pull-out resistance
		$F_{z,Rk}$ [kN]	$F_{y,Rk}$ [kN]
MT-TFB OC	MT-70 S OC MT-70 OC	23.47	14.28
	MT-80 S OC MT-80 OC	23.33	15.20
	MT-90 S OC MT-90 OC	23.47	14.90
	MT-100 S OC MT-100 OC	23.47	21.62
Partial safety coefficient concerning pull-out resistance $\gamma_M = 1.25$; partial safety coefficient concerning shear resistance $\gamma_M = 1.36$ for HILTI installation channel MT-100 S OC and MT-100 OC, partial safety coefficient concerning shear resistance $\gamma_M = 1.25$ for HILTI installation channel MT-70 S OC, MT-70 OC, MT-80 S OC, MT-80 OC, MT-90 S OC and MT-90 OC, provided that no other national regulations apply			

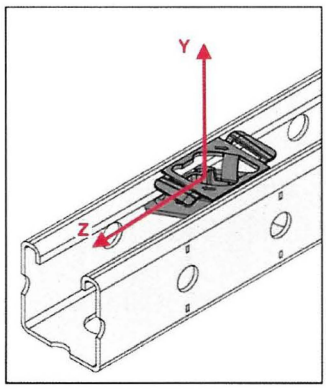

Figure C3.1: Coordinate system for the pull-out and shear resistance of HILTI channel connectors MT-TL M8, MT-TL M10, MT-TL M12, MT-TL M16, MT-TL M8 OC, MT-TL M10 OC, MT-TL M12 OC and MT-TL M16 OC

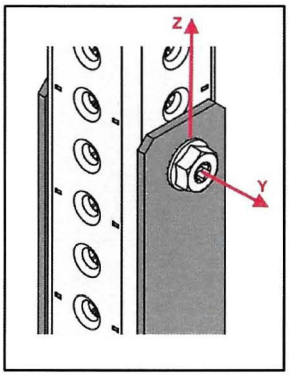

Figure C3.2: Coordinate system for the pull-out and shear resistance of HILTI channel connector MT-TFB OC